:

V1.0

2023-10-20

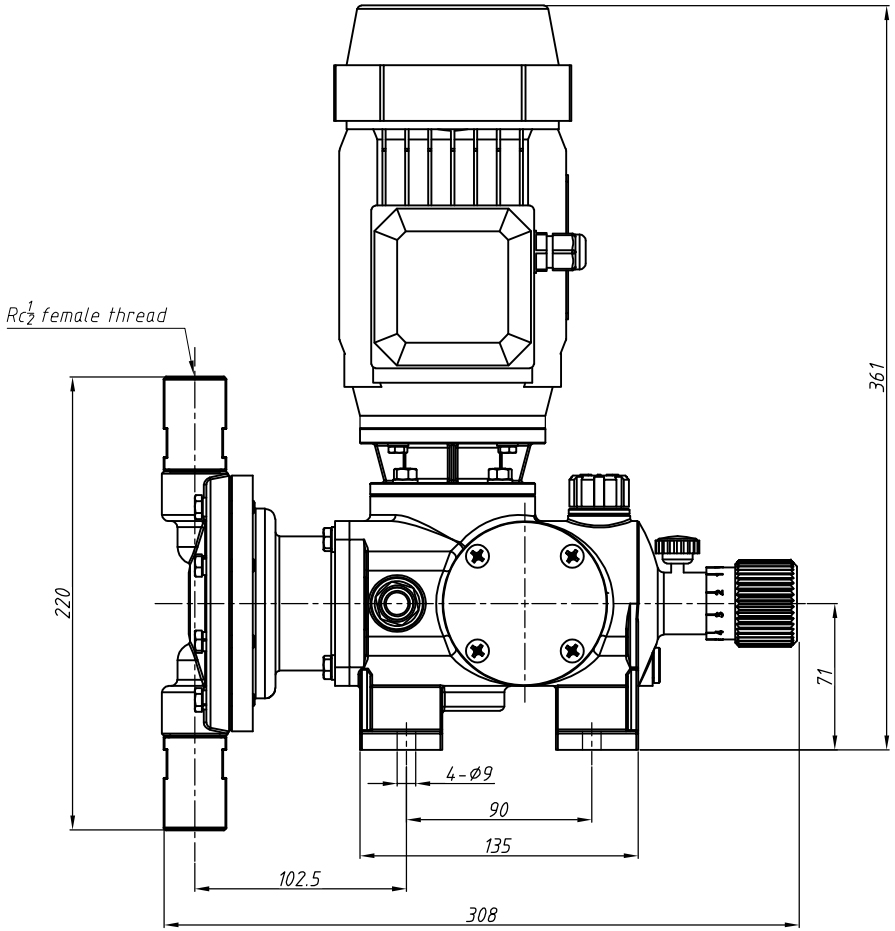

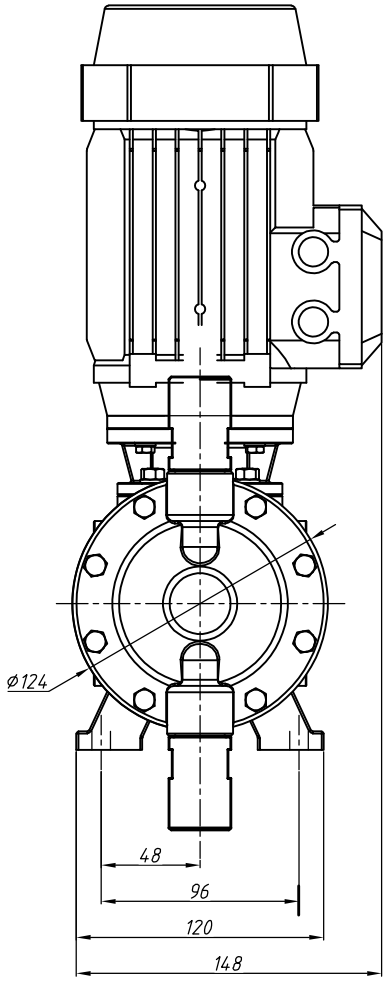

					KD60-180			
					Female thread			304/316
Mark	No.	Rev.	Sign	Date				
Design		Technic			Mark	qty	ver.	scale
Drwan		Standard				1		
Cehck		Approve						Ligao Pump Tehchnology
Aduit			Date		Page of	Tatoal page		

2023-10-20